<u>Problem 1</u>: Slope

A vehicle with mass 1240 kg and power 20 kW is moving upwards on a slope with gradient 8%. The rolling friction coefficient is 0.031.

a) **Find the velocity of this vehicle! (14.83 m/s)**
b) **How much work is made during 20 minutes? (24 MJ)**

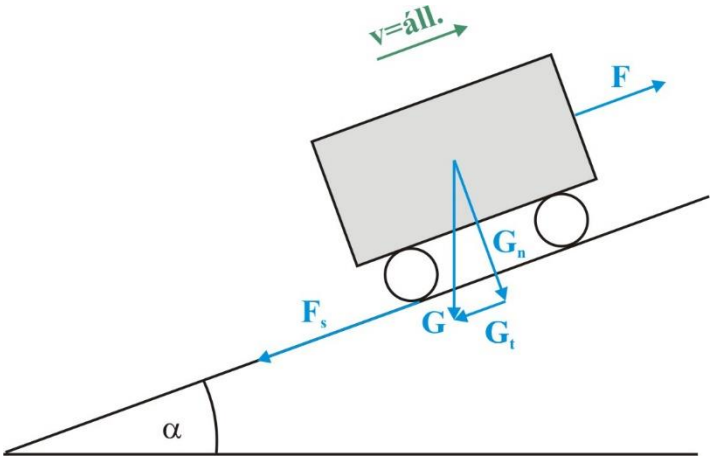

<u>2. Példa:</u> Dupla mozgó csiga **(Ált. Géptan példatár 34)**

<u>Problem 2</u>: Double pulley system

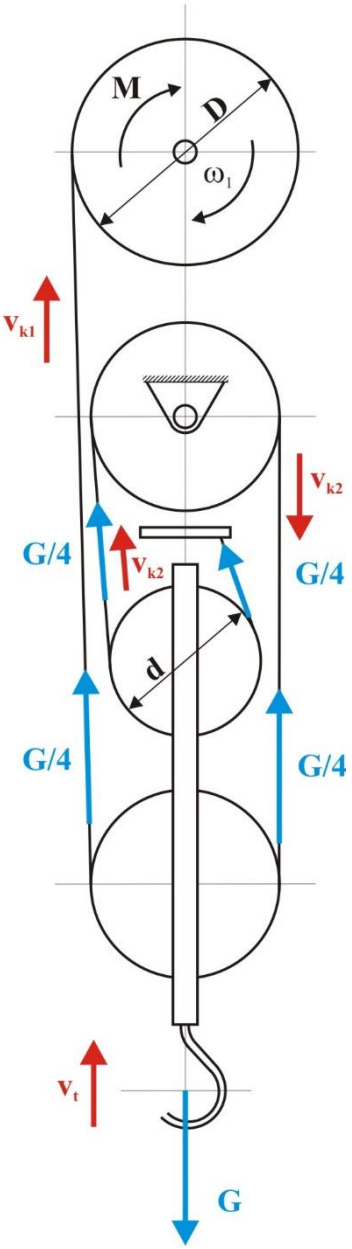

A load with weight 7 kN hangs on the lifting-hook of a double pulley system as shown in the figure. The friction is neglected.

a) Find the torque needed to rotate the driving pulley with diameter 400 mm! (350 Nm)

b) How much is the revolution number of the smaller movable pulley with diameter 200 mm, if the load is lifted with velocity of 50 m/min? (159.4 1/min)

c) How much power is required to lift the load? (5.83 kW)

<u>Problem 3</u>: Slope and gear drive

In a two-tracked mine tunnel the loaded and the empty carts are moving upwards and downwards with speed of 1.2 m/s, respectively. The mass of the empty cart is $m_0 = 250$ kg, and the mass of the cart-load is $m = 650$ kg, the slope is $a = 30°$, and the rolling resistance is $\mu_{rr} = 0.04$. How much rope force is needed to pull the loaded cart up? (**4720 N**) How much rope force is needed to brake the empty cart? (**1141 N**) The diameter of the driving pulley is 1200 mm and the revolution number of the motor is n_m=960 rpm. Find the required motor power and the gear ratio, if the efficiency of the gear drive is 62%! (**P=6.93 kW, i = 50.26**)

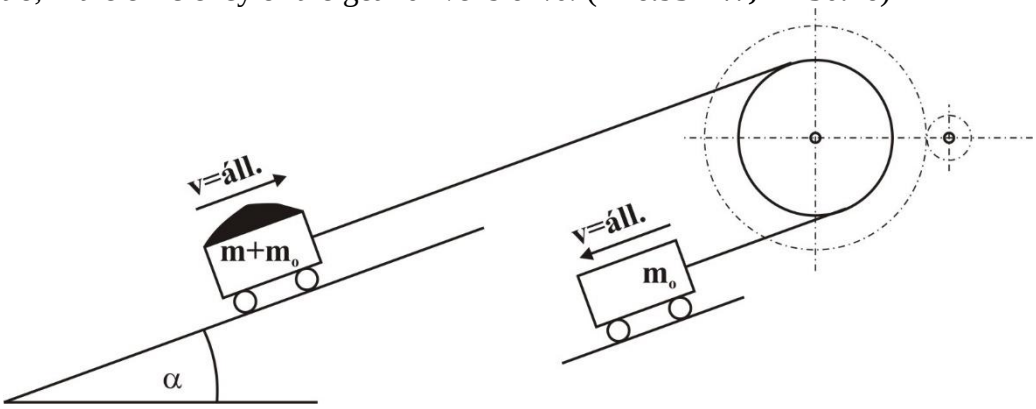

<u>Problem 4</u>: Compound pulley system with friction

Gym training machines usually lift the weights by using a pulley system as shown in the figure. Find the equivalent mass (**27.34 kg**) to the clamping force if the mass lifted is 50 kg assuming 0.3 sliding friction in both pulleys! The pulley and shaft diameters are 100 mm and 10 mm, respectively. The mass and the inertia of the pulleys are neglected**.**

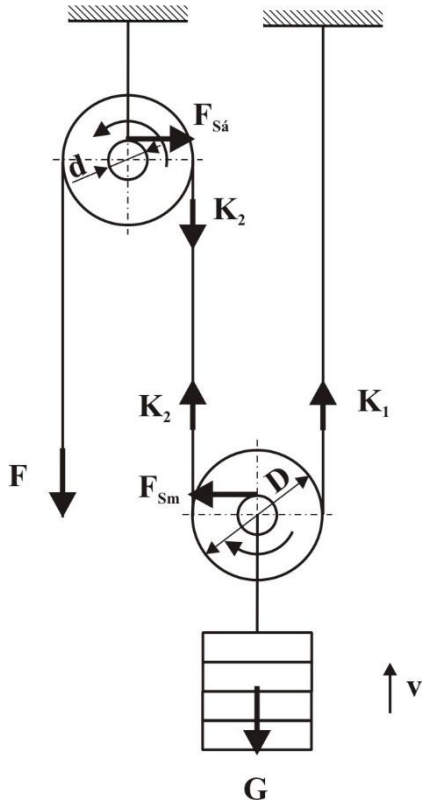

<u>Problem 5</u>: Driven mechanism

A grinder machine with power 1200W is driven by an electric motor with efficiency 72%. There is a belt drive with slip of 3% between the shaft of the motor and the blades. Due to the mechanical losses, the efficiency of the grinder is 93%. Draw the power-strip diagram of the power! How much is the input power and the overall efficiency of the machine? (**1847 W, 65%**)
The revolution number of the motor is 800 rpm, the diameter of the driving wheel is 120 mm, and the revolution number of the blade's shaft is 150 rpm. Find the diameter of the driven wheel and its peripheral velocity! (**0.621 m, 4.88 m/s**)

Megoldás:

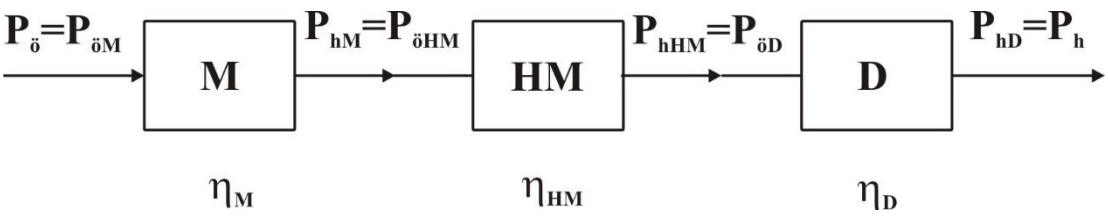

<u>Problem</u>: The power and efficiency of an electric machine

The efficiency of an electric generator as a function of the output power has been measured. At full load, the useful power was 380 kW and the efficiency was 95%. The same efficiency was measured when the output power was 200 kW. Find the constant and variable loss at full load. (**P_C = 13.1 kW, P_{v0} = 6.9 kW**) Find the maximal efficiency of the generator! (**95.2 %**)

<u>Problem</u>:
The best-efficiency point of an electric machine with nominal power 5 kW is at load factor x_{opt} = 0.8. At this point the input power is 1.21 times higher than the useful power. Find the constants of the power loss-load factor function (**P_C = 0.42 kW, P_{v0} = 0.656 kW**), the maximal efficiency and the efficiency at full load. (**η_{max} = 82.6 %, $\eta_{atfullLoad}$ = 82.6 %**)

Problem 3: A machine repeats a complete working cycle periodically that lasts for t=40 min. During the working period, the input power is 8 kW. Between two working periods, while the work piece is replaced, the machine runs idle with power consumption 1.3 kW.

a) Find the time available for the replacement of the work piece if a minimum of 75% average efficiency must be kept. During the working period (full load) the efficiency is 79%. (**13.13 min**)
b) Find the average load factor if the time of the replacement reduces to 10 min. (**$x_{average}$ = 0.8**)